Installation and Maintenance Instructions

HORIZONTAL ROLLER GUIDE

FOR

RB 250

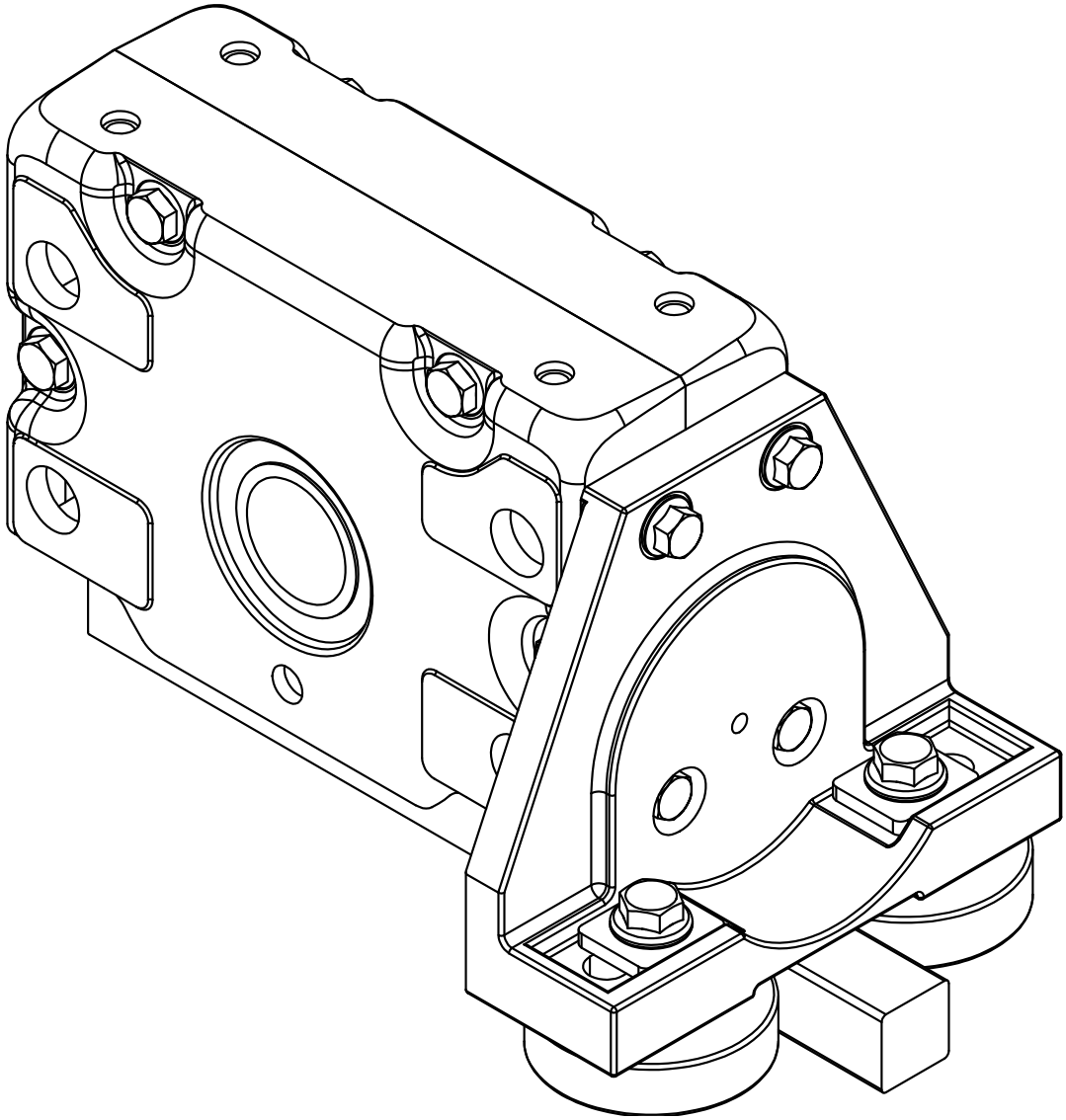

HORIZONTAL ROLLER GUIDE

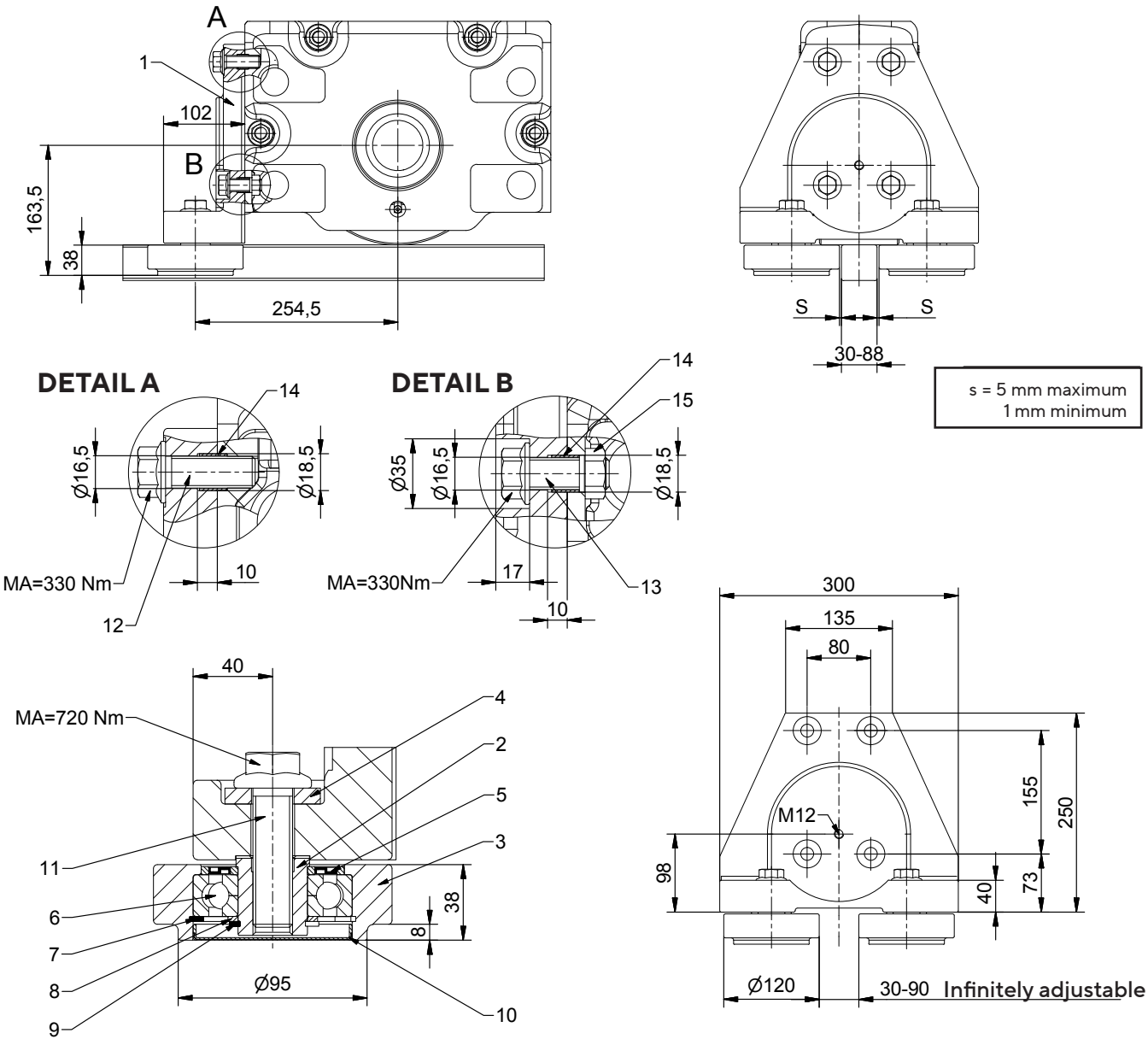

USE

For the lateral guidance of a wheel block unit.
During use, you absolutely must pay attention to the type of rail mounting and design of the rail; a use on rails with oblique addendum flanks is not permitted.

LOAD

Permissible horizontal load, maximum of 15% of the existing road load.
20% of the existing wheel load in case of a mounting of the roller guide to the customer structure.

ASSEMBLY

1. Hammer four dowel pins (14) into the drilled holes on the wheel block (approx. 5 mm).
2. Inert two retained nuts (15) into the lower drilled holes in the wheel block.
3. Mount the holder (1) with guide rollers and locking screws (12+13) to the wheel block.
4. Tighten the locking screws (12+13) to a nominal torque of MA=330 Nm.
5. Align the guide rollers to the rail and adjust the roller distance dimension “S”.
6. Tighten the locking screws (11) to a nominal torque of MA=720 Nm.

MAINTENANCE

The roller bearing is sealed with a steel disc seal at the top and a cap at the bottom and does not offer a relubricating possibility through a lubricating nipple.
By standard, the bearing is lubricated with a high-performance grease for an application range from -30°C to +90°C (Multifak EP2 of Texaco).
In case of use under different conditions, other greases are also possible, but must be specified separately in the order.

SERVICING

Retighten connection bolts to the nominal torque after 3-6 operating hours and then repeat this procedure after an additional three months.
Subsequently in accordance with the conditions of use and operating conditions, but at least once a year (refer to BGV D6, Accident Prevention Regulations for Cranes).

EINDIVIDUAL PARTS OF ROLLER GUIDE

Part no.	Quantity	Designation
1	1	Holder - KG 1.01.10799
2	2	Bolt Ø 50 x 40 - KG
3	2	Guide roller Ø 120 x 38 - KG
4	2	Disc 48 x 55 x 8 - KG
5	2	Steel disc seal 35 x 72 - LSTO
6	2	Four-point bearing DIN 628-4 - QJ 307
7	2	Circlip DIN 472 - Ø 80 x 2.5
8	2	Spacer DIN 988 - Ø 35 x 2.5
9	2	Circlip DIN 471 - Ø 35 x 2.5
10	2	Cap Ø 80 x 8 - NBR
11	2	Locking screw Durlok - M 20 x 70 - 12.9 ZT
12	2	Locking screw Sperr-Ripp - M 16 x 45 - 10.9 ZT
13	2	Locking screw Sperr-Ripp - M 16 x 40 - 10.9 ZT
14	4	Locking pin ISO 8752 - Ø 18,5 x 1 x 14 FSt-Zn
15	2	Retained nut M 16 - C35 galvanised

NOTIZEN:

KARL GEORG

Karl Georg GmbH
Karl-Georg-Straße 3
D-57612 Ingelbach-Bahnhof

T: +49 (0)2688 / 95 16 - 0
info@karl-georg.de
www.karl-georg.de

Subject to alterations by the manufacturer for the purposes of further technical development!

Thus, no claims can be derived from the information, figures and descriptions given in these operating instructions.

© 09/2024 Karl Georg GmbH

Reprinting, duplication or translation, also as extract, is not permitted without previous written consent of Karl Georg GmbH. All rights are expressly reserved for Karl Georg GmbH according to the copyright law. Subject to alterations

Printed in Germany